Rustler EM

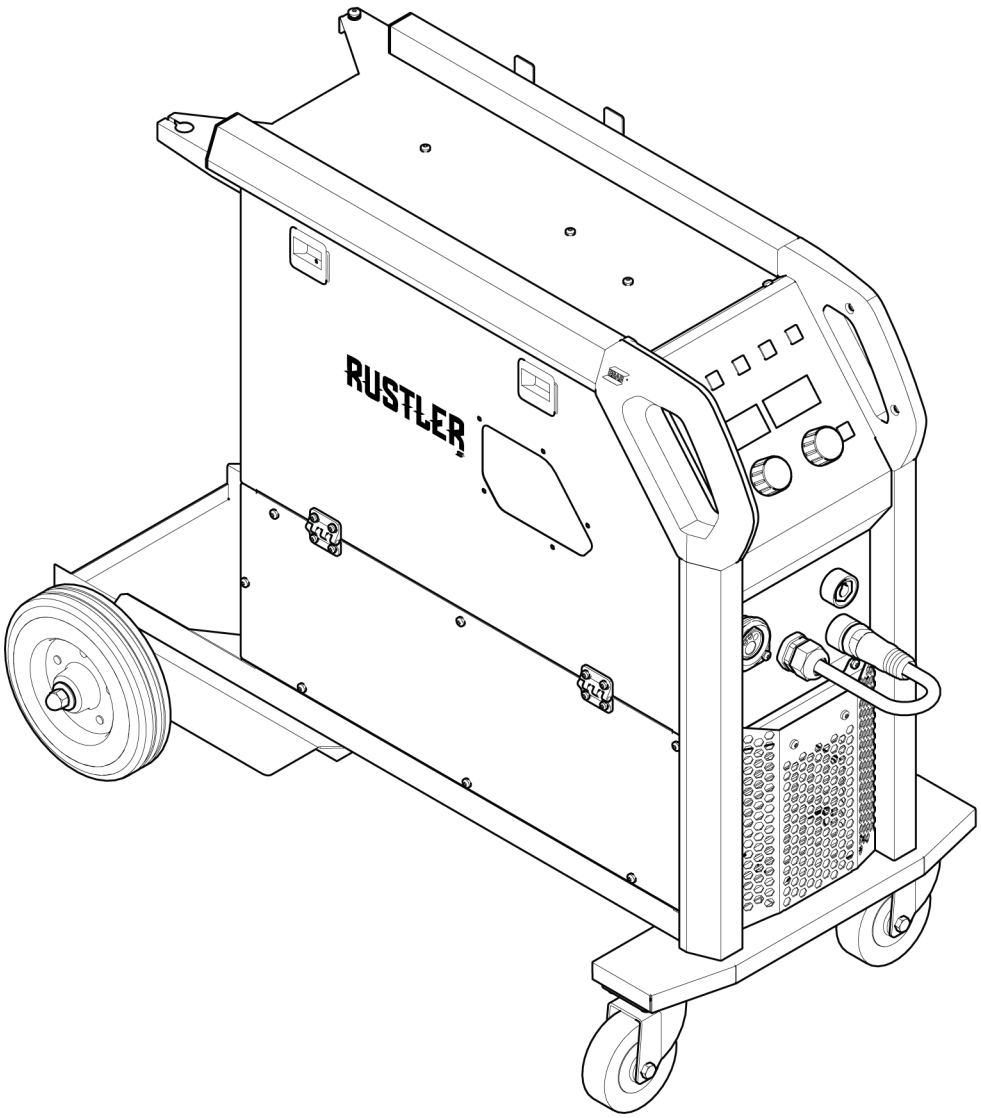

Spare parts list

0448 318 001 GB 20261015

Valid for: OP316YYXXXXXX

Ordering no.	Denomination	Notes
0448 200 880	Rustler EM 201C	With torch MXL 201, 3 m EURO
0448 200 890	Rustler EM 203C	With torch MXL 201, 3 m EURO
0448 250 880	Rustler EM 251C	With torch MXL 271, 3 m EURO
0463 933 *	Rustler EM	Instruction manual

Spare parts may be ordered through your nearest ESAB dealer, see **esab.com**. When ordering, please state product type, serial number, denominations and ordering numbers according to the spare parts list. This facilitates dispatch and ensures correct delivery.

Maintenance and repair work should be performed by an experienced person, and electrical work only by a trained electrician. Use only recommended spare parts.

For accessories to the product, see the instruction manual.

The three last digits in the document number of the manual show the version of the manual. Therefore they are replaced with * here. Make sure to use a manual with a serial number or software version that corresponds with the product, see the front page of the manual.

1 SPARE PARTS **4**

1.1 Chassis module **4**

1.2 Housing module **6**

1.3 Supporting module **8**

1.4 Front panel module **10**

1.5 Rear panel module **12**

1.6 PFC module Rustler EM 201, 251 ..... **14**

1.7 Rectifier module **15**

1.8 Mounting plate module **16**

1.9 Wire feed mechanism **18**

 © ESAB AB 2026

1 SPARE PARTS

1.1 Chassis module

					C = Component designation in the circuit diagram
Item	**Qty**	**Ordering no.**	**Denomination**	**Notes**	**C**
1	1		Base metal case assy		
2	2	0349 309 845	Wheel SR 200	Also order Pos 11	
3	1		Gas cylinder shelf		
4	2	0455 467 001	Castor wheel D100 H125		
5	1		Front wheels bracket		
6	15		Screw	MRT COMBI M6 x 16	
7	4		Screw	MRT M6 x 16 black	
8	2		Reinforcement assy		
9	2		Reinforcement RHS		
10	2		Plain washer	20-200 HV-A2K	
11	2	0192 859 026	Locking washer	Type P	
12	18		Screw	MRT COMBI M5 x 10	
13	1		Service plate		

 © ESAB AB 2026

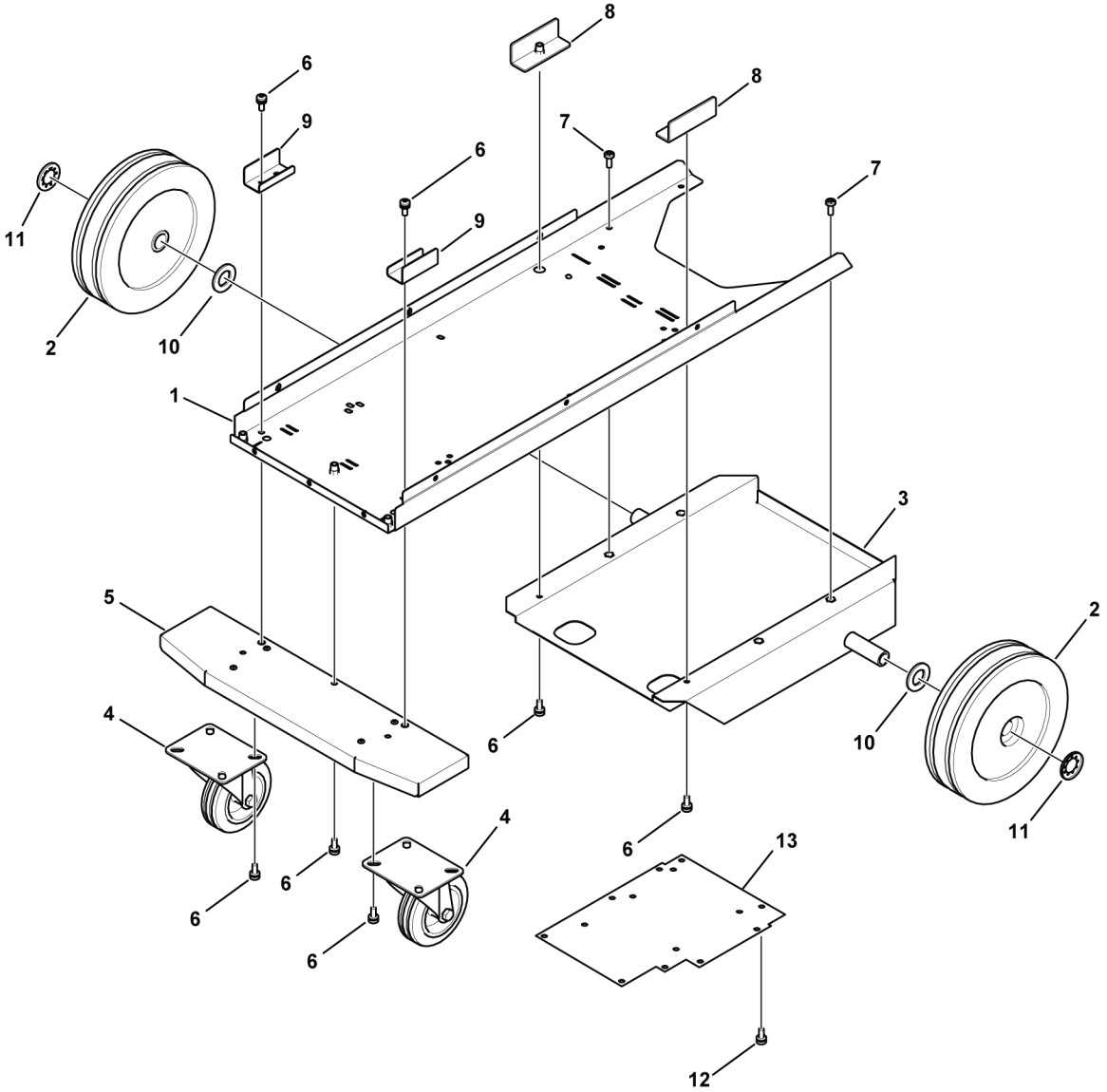

 © ESAB AB 2026

1.2 Housing module

C = Component designation in the circuit diagram					
Item	**Qty**	**Ordering no.**	**Denomination**	**Notes**	**C**
1	1	0448 206 001	Front metal shield		
2	1	0448 352 780	Front water proof plate cpl		
3	1		Rustler side panel label	See item 202	
4	1		Rustler weld parameter label	See item 202	
5	1	0448 381 001	Top metal trim strip 1		
6	1	0448 382 001	Top metal trim strip 2		
7	1		Cap for strip left	See item 202	
8	1		Cap for strip right	See item 202	
9	1		Top metal case		
10	1		Left metal panel	See item 202	
11	1	0448 209 001	Right side panel		
12	1	0448 154 001	Cable holder		
13	1	0448 155 001	Torch holder		
15	1		Left bottom metal cover	See item 202	
16	1	0448 405 011	Window cover	See item 202	
17	2	0448 433 780	Hinge	See item 202	
18	2	0448 406 001	Door hatch	See item 202	
19	5		Screw	MRT M4 x 12	
20	5		Spring washer		
21	5		Plain washer	4-200 HV-A2K, see item 202	
22	13		Washer lock	AZ 4,3 x 8 ST, see item 202	
23	32		Screw	MRT M5 x 12 black, see item 202	
24	1		Screw	MRT M6 x 16 black	
25	1		Chain	L=700	
26	1		Hexagon nut with flange		
27	8		Screw	MRT M4 x 8 black, see item 202	
29	1		Washer		
30	1		Harneses ground cable		
31	4		Screw	MRT M5 x 20	
32	4		Spring washer		
33	4		Plain washer	5-200 HV-A2K	
35	1		Sealing strip	Not shown in illustration, see item 202	

 © ESAB AB 2026

Item	Ordering no.	Denomination	Notes
201	0464 751 071	Cap kit	Including items 7 and 8
202	0464 751 070	Left panel kit	Including items 3, 4, 10, 15, 16, 17, 18, 19 (1), 20 (1), 21 (1), 22 (9), 23 (7), 27 (8) and 35

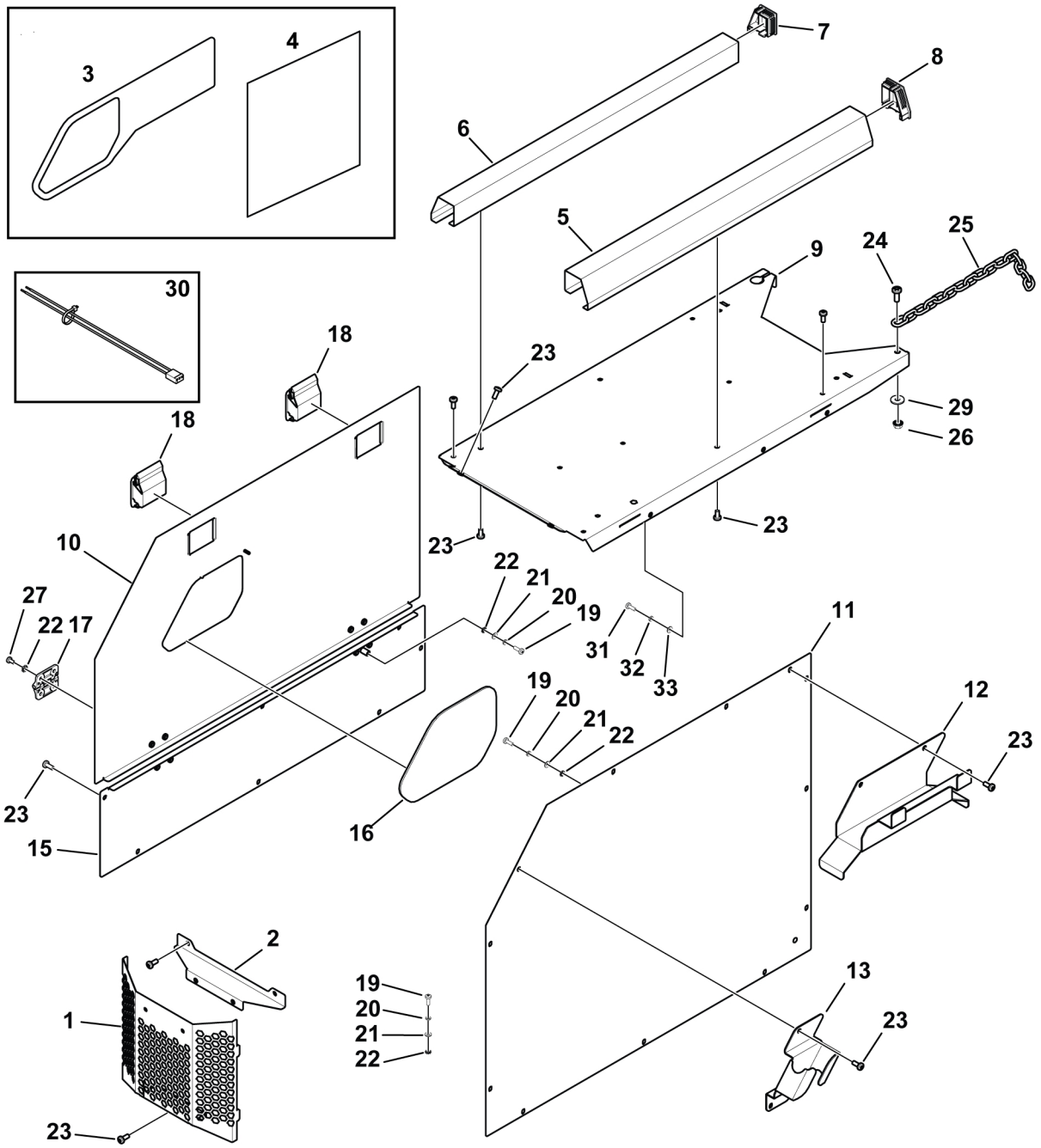

 © ESAB AB 2026

1.3 Supporting module

C = Component designation in the circuit diagram					
Item	**Qty**	**Ordering no.**	**Denomination**	**Notes**	**C**
1	1		Left bracket of control board		
2	33		Screw	M5 x 10	
3	1		Left metal bar upper side		
4	1		Right bracket of control board		
5	1		Right metal bar upper side		
6	1		Left metal bar down side		
7	1		Right metal bar down side		
8	1		Metal air baffle	Rustler EM 203	
9	1		Screw	M4 Rustler EM 203	

 © ESAB AB 2026

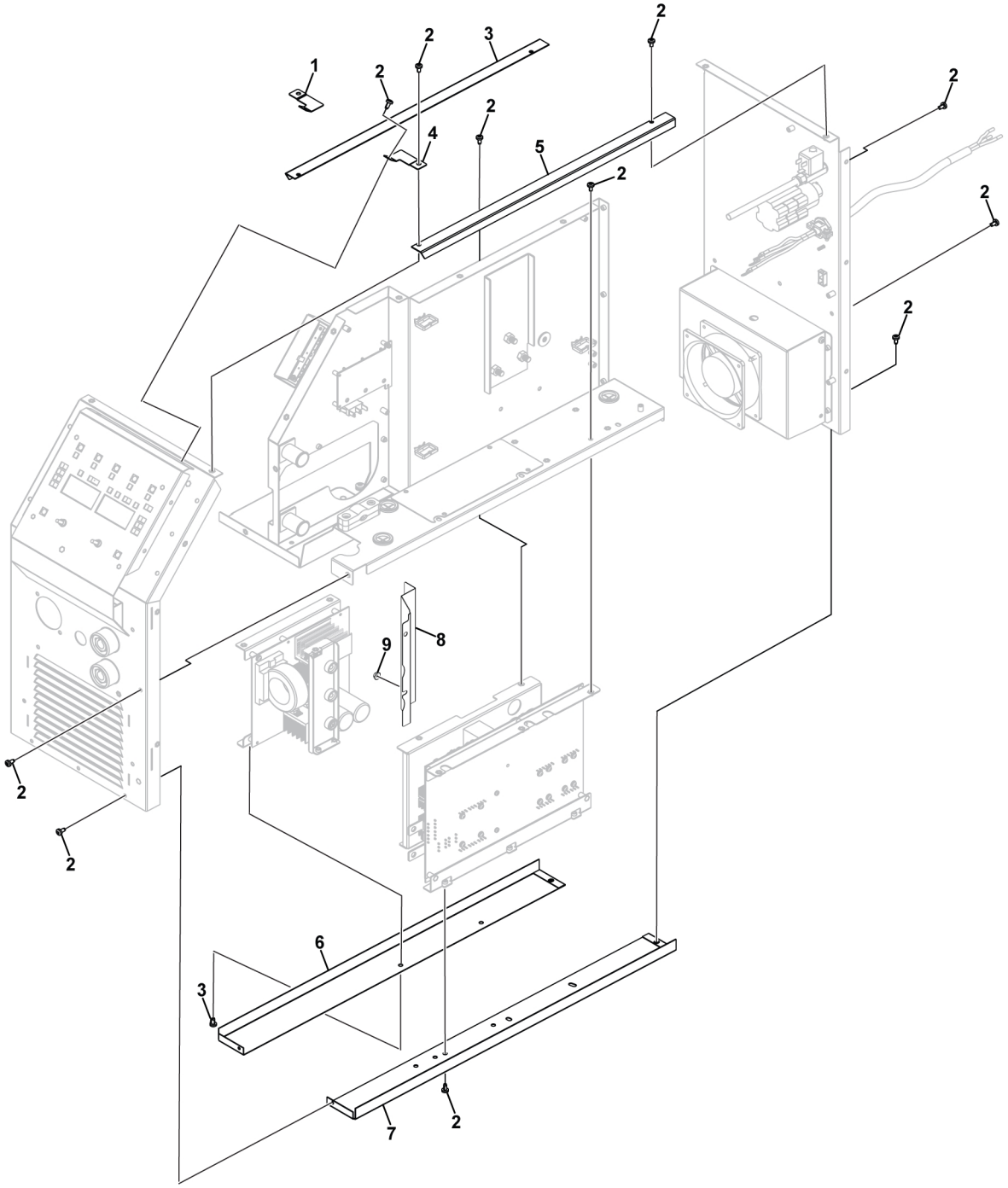

 © ESAB AB 2026

1.4 Front panel module

C = Component designation in the circuit diagram					
Item	**Qty**	**Ordering no.**	**Denomination**	**Notes**	**C**
1	1	0464 663 191	Left handle		
2	1	0464 663 158	Right handle		
3	4		Screw	M5 × 25	
4	1		Front use control metal panel	See item 401, 402, 403	
5	4		Screw	M3 x 8, see item 401, 402, 403	
6	1		Front metal panel	See item 404	
7	2		Screw	M5 × 10	
8	2	0321 475 893	Knob	D36-1/4IN AristoFeed	
9	7		Black rubber		
10	2		Rubber for encoder	See item 401, 402, 403	
11	1		Cotton shading of LED	See item 401, 402, 403	
12	1		Front panel PCB	See item 401, 402, 403	1AP1
15	1	0448 355 782	Polarity change cable 25mm²		
16	2	0160 362 881	OKC		
			Seal rubber for OKC		
19	1		Front panel label	See item 401, 402, 403	
20	1		Rustler light front label	See item 404	
21	1		ESAB logo decal	See item 404	
22	1		Rustler EM label		

Item	Ordering no.	Denomination	Notes
401	0464 663 271	HMI kit, front panel, EM 201	Including items 4, 5, 10, 11, 12 and 19
402	0464 663 272	HMI kit, front panel, EM 203	Including items 4, 5, 10, 11, 12 and 19
403	0464 751 053	HMI kit, front panel, EM 251	Including items 4, 5, 10, 11, 12 and 19
404	0464 751 040	Front panel kit	Including items 6, 20 and 21

 © ESAB AB 2026

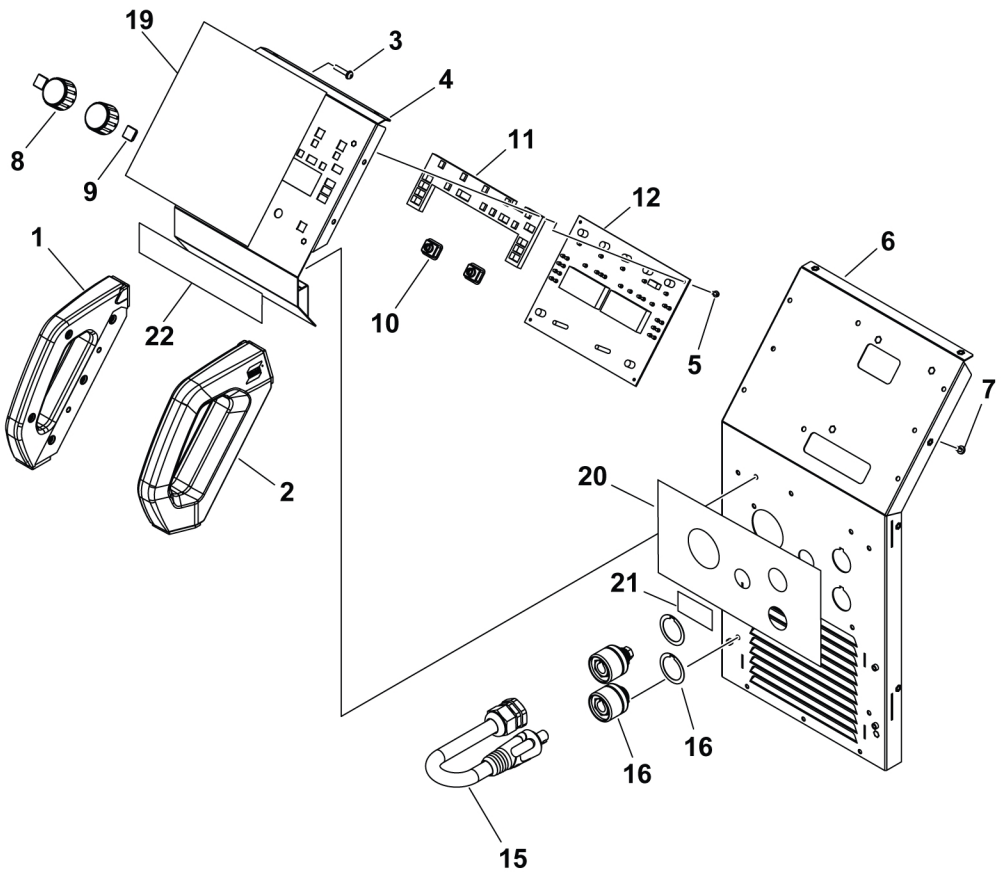

 © ESAB AB 2026

1.5 Rear panel module

C = Component designation in the circuit diagram					
Item	**Qty**	**Ordering no.**	**Denomination**	**Notes**	**C**
1	1	0464 751 054	Rear panel		
2	1	0464 663 277	Inlet fitting		
3	1	0464 663 281	Mains switch	Rustler EM 201	2SW1
		0464 663 175		Rustler EM 203, 251	
4	1	0464 663 282	Mains cable		
5	1		Gas tube		
6	1	0464 663 308	Quick connect fitting		
7	1	0464 663 177	Solenoid valve		
8	1		Washer		
9	2		Screw	M4 x 16, see item 501	
10	2		Pressure lock for cord	See item 501	
11	2		Nut	M4, see item 501	
12	4		Screw	M5 × 10	
13	1		Cover for socket of heater		
14	1	0464 663 176	Cable gland		
15	1	0464 663 279	Fan	Rustler EM 201, 251	20EV1
		0464 663 283		Rustler EM 203	
16	1		Fan bracket		
17	4		Screw	ST5.0 × 20	
18	1		Mains switch label		
19	1	0464 751 056	Metal louver		

Item	Ordering no.	Denomination	Notes
501	0464 751 055	Pressure lock kit	Including items 9, 10 and 11

 © ESAB AB 2026

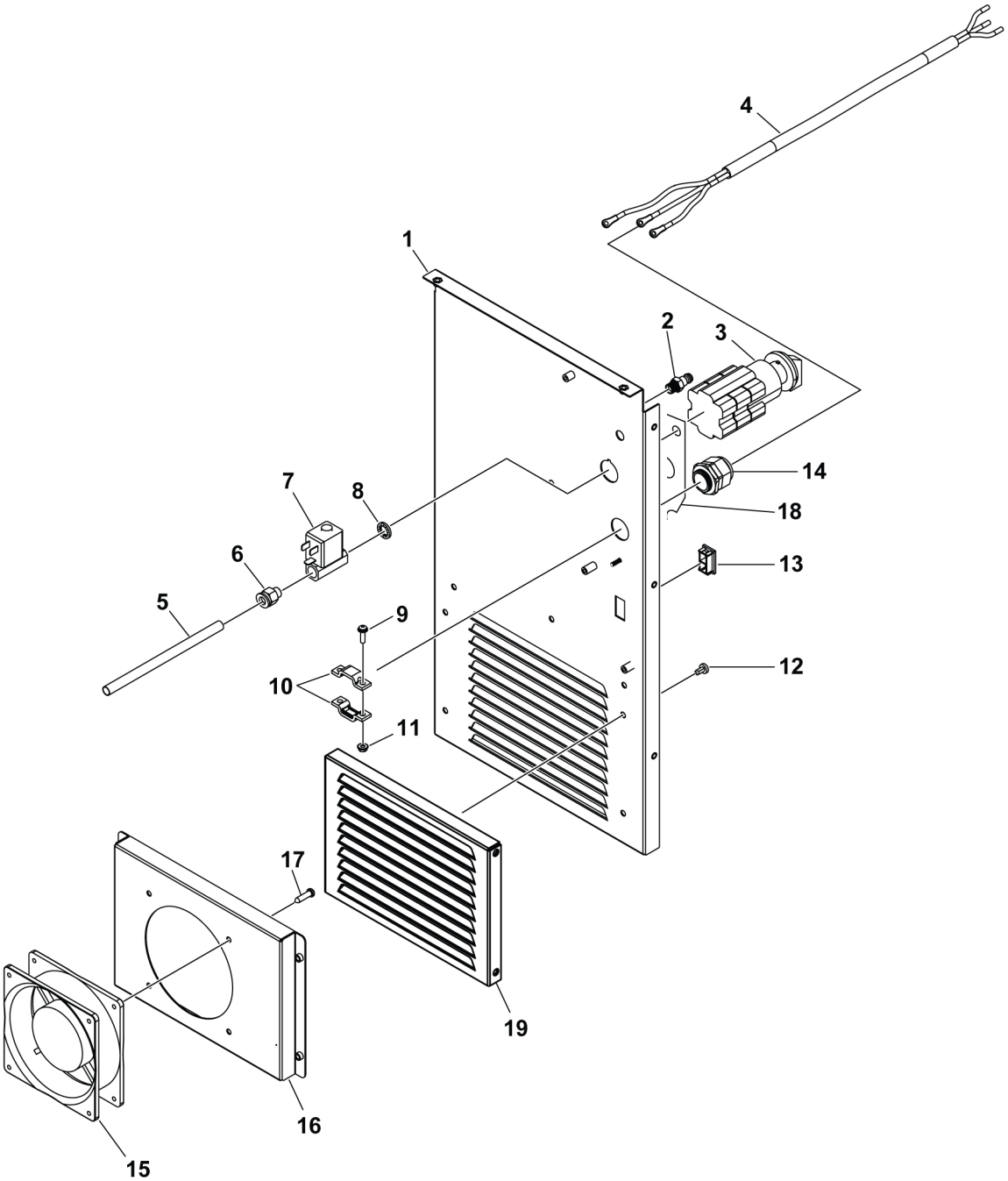

 © ESAB AB 2026

1.6 PFC module Rustler EM 201, 251

C = Component designation in the circuit diagram					
Item	**Qty**	**Ordering no.**	**Denomination**	**Notes**	**C**
1	1		Screw	M5 × 30	
2	1	0464 663 310	Insulate pillar		
3	1		Bracket of heatsink		
4	1		Insulate bar for heatsink		
5	3		Screw	M4 × 10	
6	1	0464 663 254	PFC board	Rustler EM 201	
		0464 751 049		Rustler EM 251	
7	2		Bracket of PFC board upper side		
8	1		Bracket of PFC board down side		

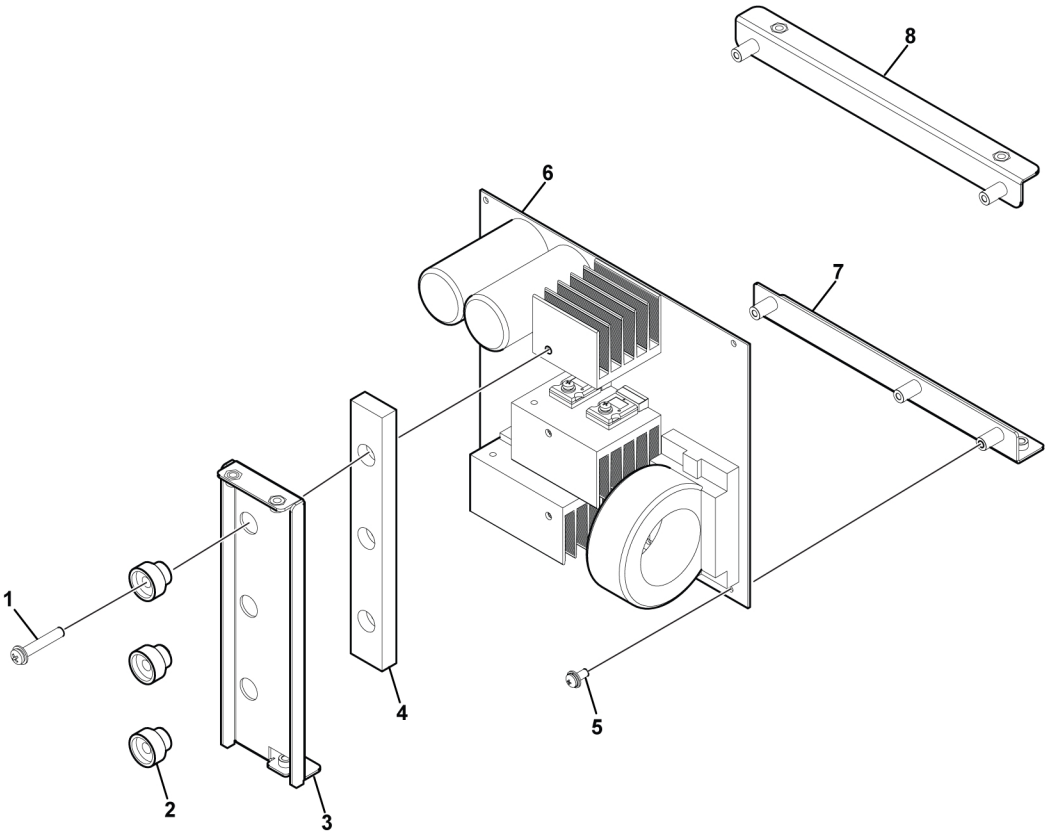

 © ESAB AB 2026

1.7 Rectifier module

C = Component designation in the circuit diagram					
Item	**Qty**	**Ordering no.**	**Denomination**	**Notes**	**C**
1	1		Copper bar I		
2	1		Copper bar II		
3	4		Screw	M5 × 10	
4	1		Fan bracket	Rustler EM 201, 203	
5	2		Screw	ST4.8 x 9.5 Rustler EM 201, 203	
6	4		Screw	M5 × 10 Rustler EM 201, 203	
7	6	0464 663 310	Insulate pillar		
8	6		Screw	M5 × 30	
9	5		Screw	M4 × 10	
10	3		Insulate bar for heatsink of IGBT		
11	1		Bracket of heatsink of IGBT		
12	1		Bracket of main PCB		
13	1		Bracket of main PCB down side		
14	1	0464 663 255	Main PCB	Rustler EM 201	15AP1
		0464 663 256		Rustler EM 203	
		0464 751 050		Rustler EM 251	

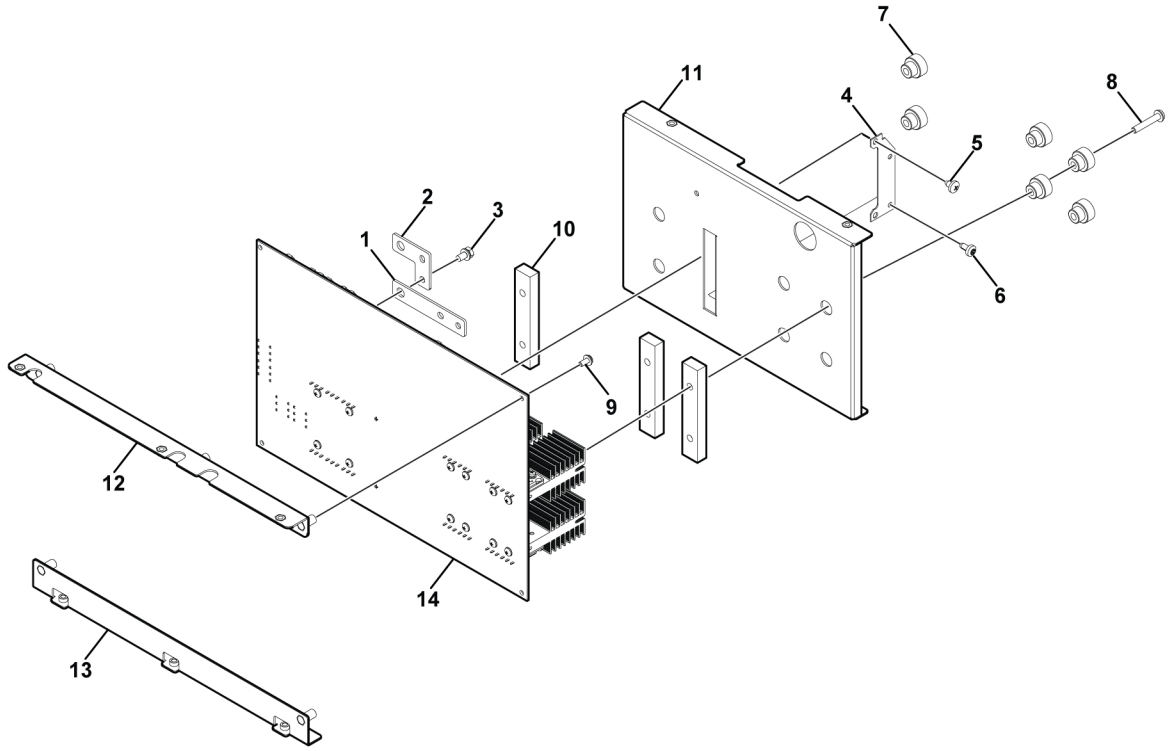

 © ESAB AB 2026

1.8 Mounting plate module

C = Component designation in the circuit diagram					
Item	**Qty**	**Ordering no.**	**Denomination**	**Notes**	**C**
1	6		Screw	M5 × 10	
2	1		Inside LED PCB	See item 801	1AP3
3	1	0464 663 182	Spool	15 kg	
4	13		Screw	M3 × 8, see item 801	
5	1		Middle support plate		
6	2		Screw	M4, see item 801	
7	2		Washer	Φ4, see item 801	
8	4		Washer	Φ4, see item 801	
9	1		Bracket of inside LED	See item 801	
10	3		Inside LED	See item 801	
11	1	0464 663 303	Insulate paper for wire feeder		
12	1		Inside LED shading	See item 801	
13	1	0464 663 184	Switch of side panel		
14	2		Cable tie		
15	1	0464 663 253	SYN PCB	Rustler EM 201, 203	1AP2
		0464 663 257		Rustler EM 251	
16	2		Screw	M4 × 10, see item 802	
17	2		Screw	M5 × 25, see item 802	
18	1		Cable locker upper side	See item 802	
19	5	0464 663 275	Cable cover		
20	1		Cable locker down side	See item 802	
21	2		Washer	Φ6	
22	2		Washer	Φ6	
23	2		Screw	M6 × 20	
24	1		Mounting plate		
25	2		Nut	M6	
26	1		Insulate plate for wire feeder		
27	1		Separated metal plate in mounting plate		
28	1		Hoes clamp		
29	1	0349 308 476	Wire feeder		20M1
30	2		Screw	MRT M5 x 16 black	
31	1		Feeding mechanism plate		
32	2		Screw M6S	M6 x 20	

 © ESAB AB 2026

C = Component designation in the circuit diagram					
Item	**Qty**	**Ordering no.**	**Denomination**	**Notes**	**C**
33	2		Spring washer		
34	2		Plain washer		

Item	Ordering no.	Denomination	Notes
801	0464 663 183	LED kit	Including items 2, 4, 6, 7, 8, 9, 10 and 12
802	0464 663 304	Cable locker kit	Including items 16, 17, 18 and 20

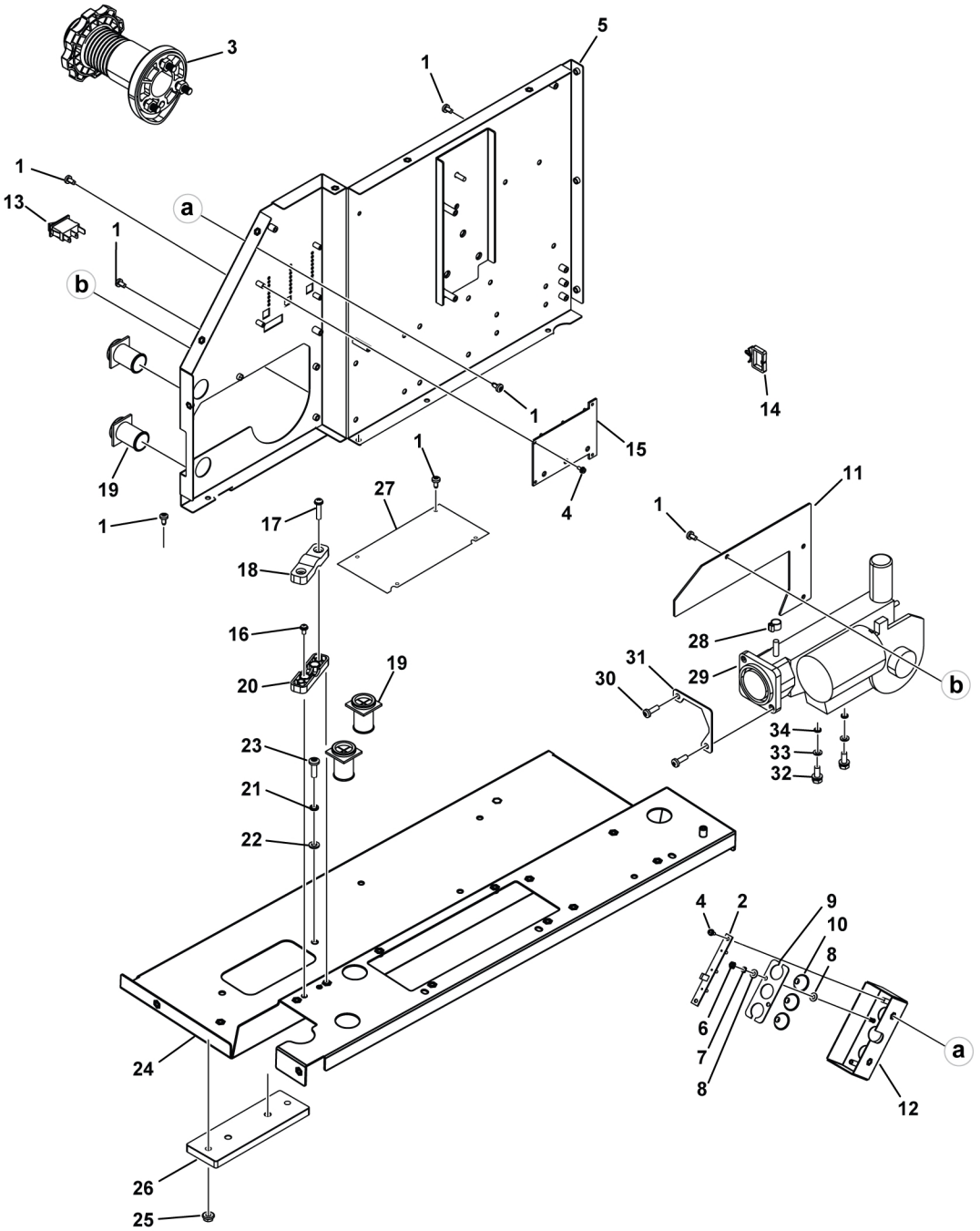

 © ESAB AB 2026

1.9 Wire feed mechanism

C = Component designation in the circuit diagram					
Item	**Qty**	**Ordering no.**	**Denomination**	**Notes**	**C**
1	1	0469 397 001	Drive unit		
2	1	0367 529 001	Pressure arm		
3	1	0455 896 001	Spring		
4	2	0369 750 001	Insulating sleeve		
5	1	0455 889 001	Insert tube		
6	1	0455 886 001	Outlet nozzle		
7	1	0455 882 001	Current sleeve		
8	1	0455 883 001	Spacer sleeve		
9	1		Plain washer	16×8.4×1.6	
10	1		Spring washer	14.8×8.1×2	
11	1		Screw	M8×20	
12	1	0215 201 202	O-ring		
13	1	0455 881 001	Protect plate		
14	1	0455 898 001	Knurled screw	M5	
15	1	0349 308 502	Knurled screw		
16	1	0367 556 002	Feed roll	Ø0.8-1.0 mm Fe, Ss cored wire	
17	1		Nut	M5	
18	1	0455 893 001	Cylindric pin		
19	1	0455 884 001	Gearing housing		
20	1		Cross head plastic thread	TW 5.1×20	
21	1	0455 892 001	Spasing ring		
22	1	0466 074 001	Inlet nozzle		
23	1	0367 528 001	Pin bolt		
24	1	0368 749 880	Pressure transmitter		
25	1	0191 496 114	Key		
26	1	0215 701 007	Lock ring	D10	

 © ESAB AB 2026

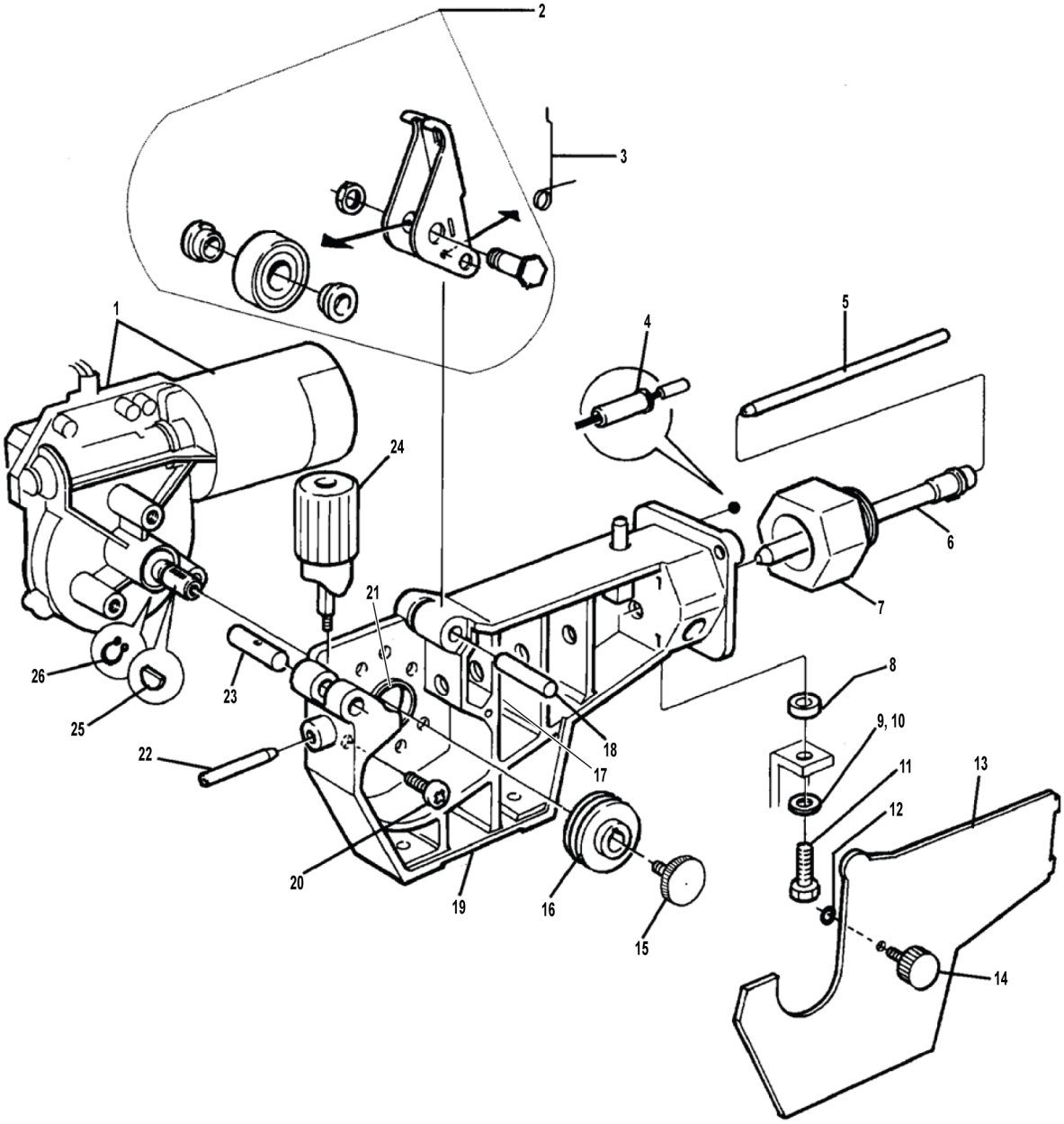

 © ESAB AB 2026

A **WORLD** OF **PRODUCTS** AND **SOLUTIONS.**

For contact information visit esab.com

ESAB AB, Lindholmsallén 9, Box 8004, 402 77 Gothenburg, Sweden, Phone +46 (0) 31 50 90 00

manuals.esab.com